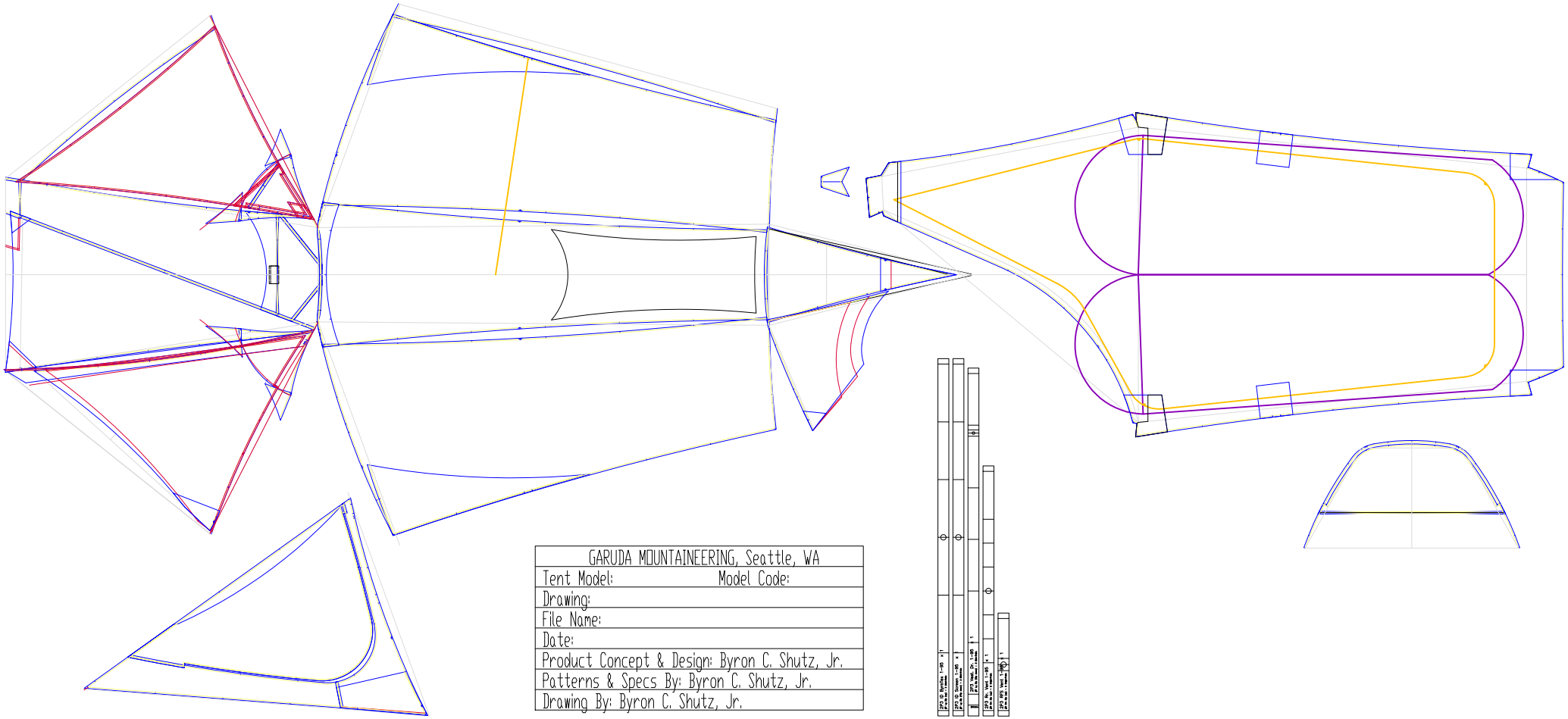

GARUDA MOUNTAINEERING, Seattle, WA	
Tent Model:	Model Code:
Drawing:	
File Name:	
Date:	
Product Concept & Design: Byron C. Shutz, Jr.	
Patterns & Specs By: Byron C. Shutz, Jr.	
Drawing By: Byron C. Shutz, Jr.	